Mobile EEG suitcase setup

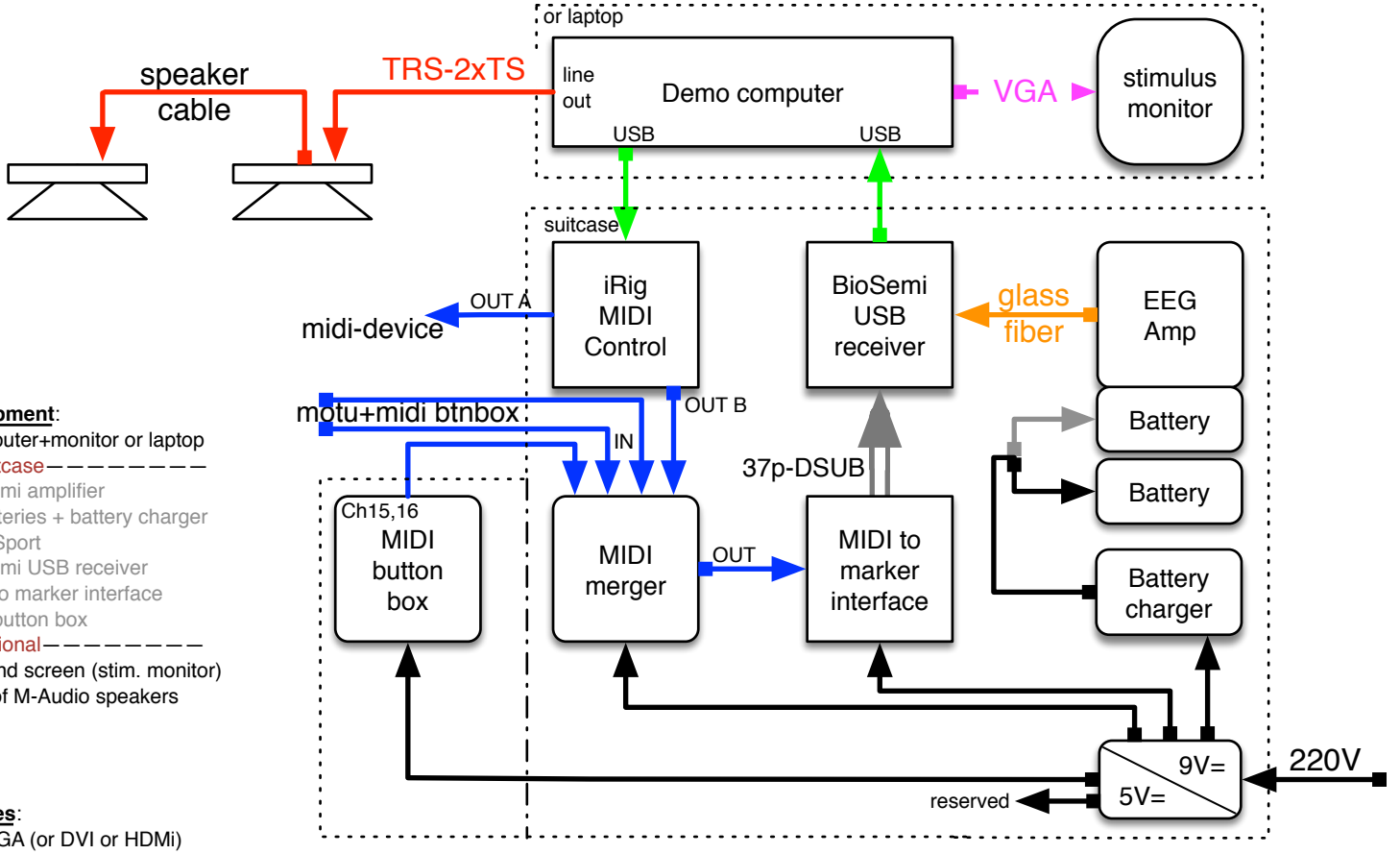

Equipment:
Computer+monitor or laptop
—suitcase————————
Biosemi amplifier
2 Batteries + battery charger
Midi Sport
Biosemi USB receiver
Midi to marker interface
Midi button box
—optional————————
Second screen (stim. monitor)
Pair of M-Audio speakers

Cables:
1 x VGA (or DVI or HDMi)
+ mini-display to VGA adapter
(or DVI or HDMi)
1 x ethernet (wifi?)
EEG suitcase power cable (check!)
—suitcase————————
2 x USB
2 x MIDI
37p male/female dsub
1 x glass fiber
—optional————————
1 x MIDI
1 x speaker cable
1 x TRS-2TRS
(stereo to 2xmono phone plug)
1 x 1/4" jack socket to 3.5mm plug adapter

Power supply adapters:
—suitcase————————
Midi button box (universal USB adapter)
+ micro-usb cable
Midi to marker interface
Battery charger

Mains:
socket junction box with enough
connections for:

Computer
monitor
speakers

power
USB
glass fiber
MIDI
audio
video
wireless
data