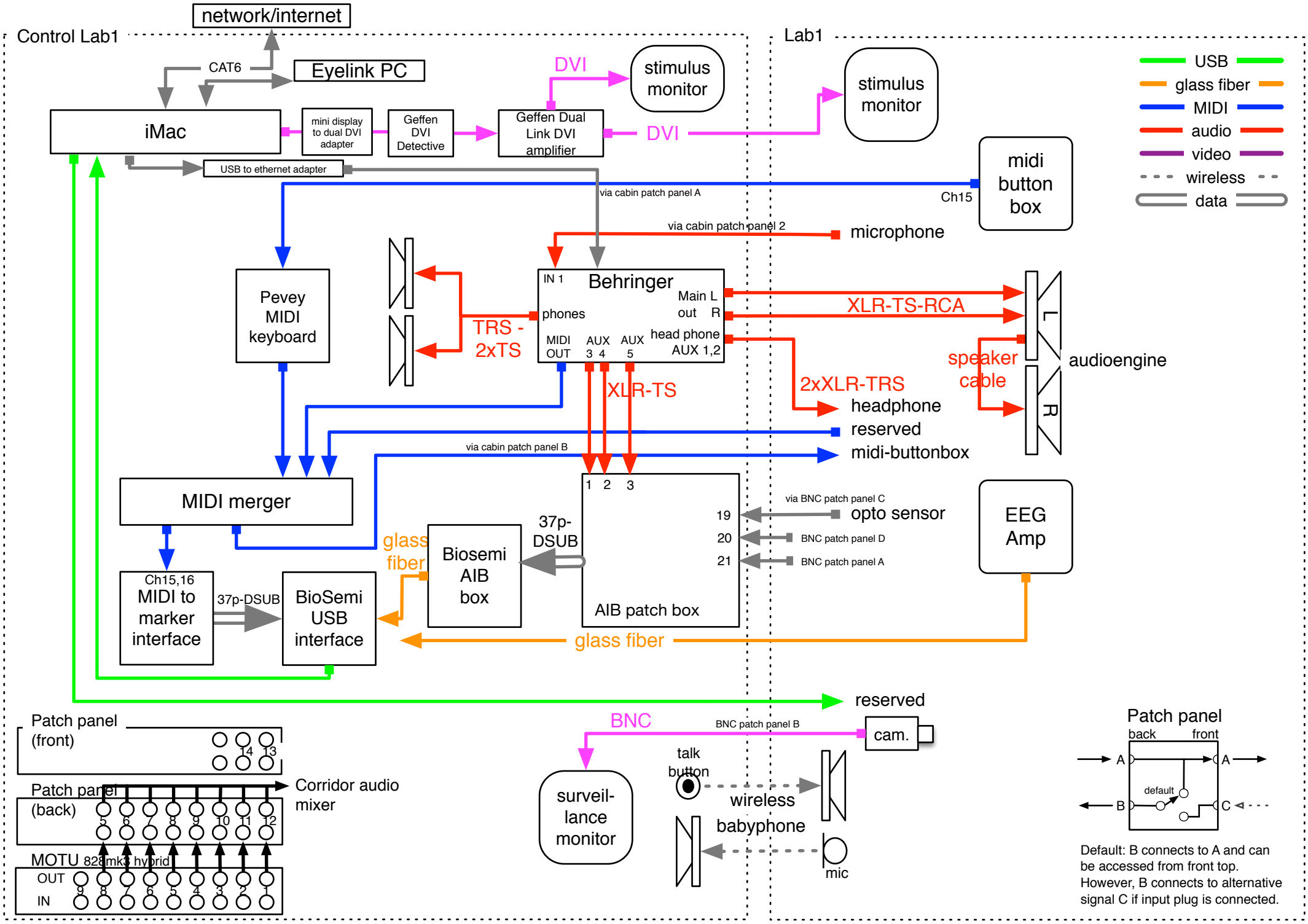

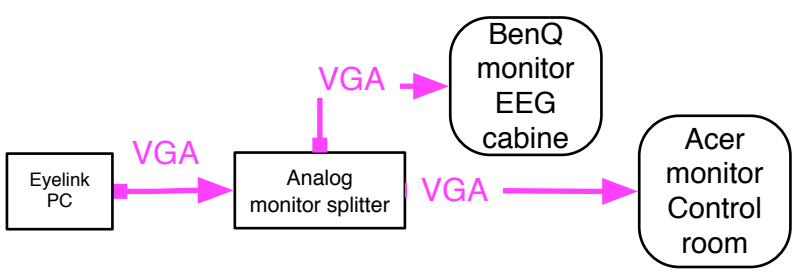

Note: Extra ethernet cable and VGA cable running from control room to corridor and respectively EEG cabine not used anymore.

The second black ethernet cable is used to connect keyboard and mouse in control room with Eyelink PC in corridor (via adapter).
The blue ethernet cable connects the iMac via usb- or minidisplay to ethernet adapter with Eyelink PC to transfer eye tracker data.