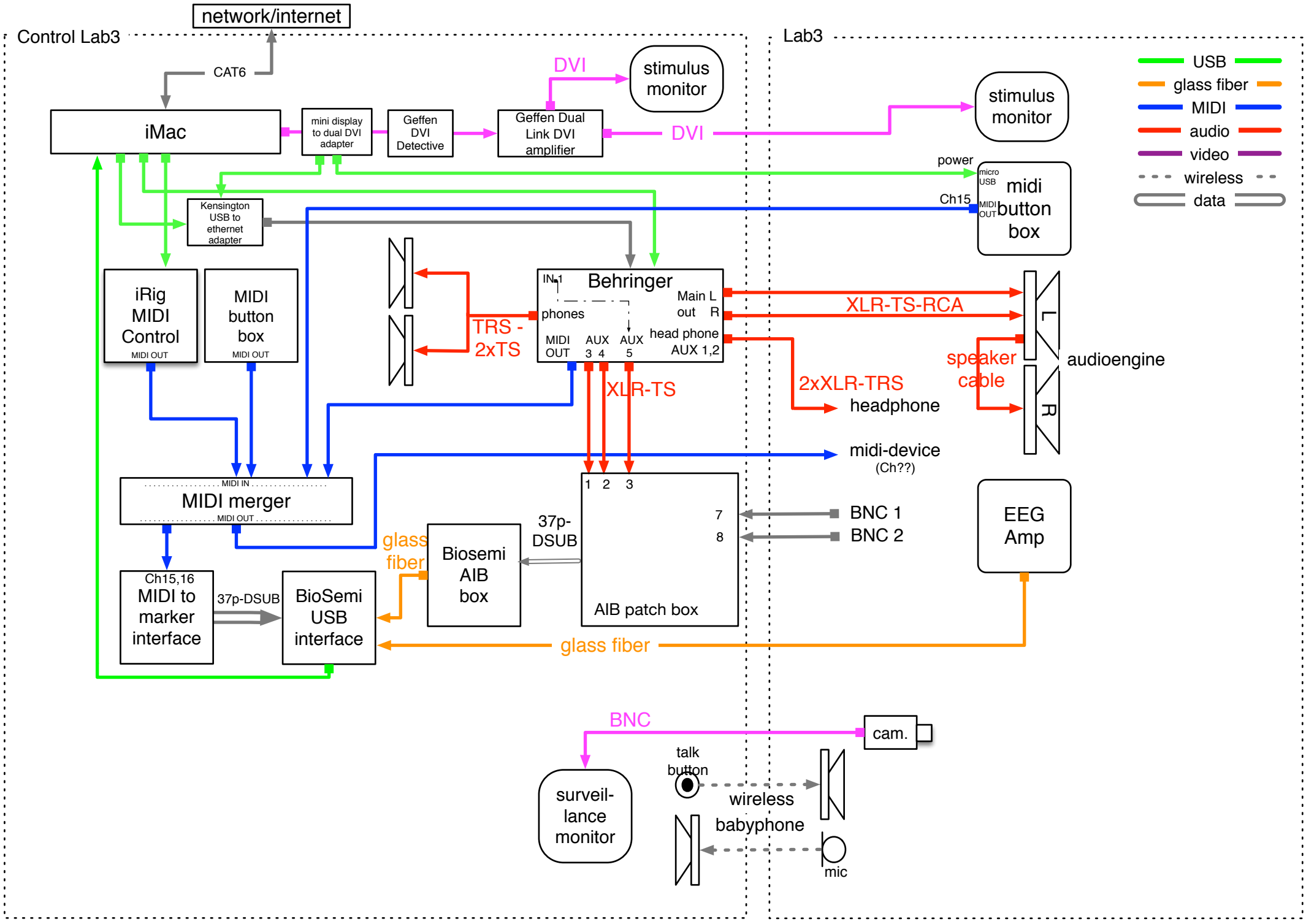
network/internet
Control Lab3
Lab3
CAT6
iMac
mini display to dual DVI adapter
Geffen DVI Detective
Geffen Dual Link DVI amplifier
DVI
stimulus monitor
DVI
stimulus monitor
USB
glass fiber
MIDI
audio
video
wireless
data
power
micro USB
midi button box
Ch15
MIDI OUT
Kensington USB to ethernet adapter
iRig MIDI Control
MIDI OUT
MIDI button box
MIDI OUT
TRS - 2xTS
IN 1
Behringer
phones
Main L
out R
head phone
AUX 1,2
MIDI OUT
AUX 3 4
AUX 5
XLR-TS-RCA
L
R
audioengine
speaker cable
2xXLR-TRS
headphone
XLR-TS
midi-device
(Ch??)
MIDI IN
MIDI merger
MIDI OUT
1 2 3
7
8
BNC 1
BNC 2
EEG Amp
37p-DSUB
glass fiber
Biosemi AIB box
AIB patch box
Ch15,16
MIDI to marker interface
37p-DSUB
BioSemi USB interface
glass fiber
BNC
cam.
talk button
wireless babyphone
surveil-lance monitor
mic

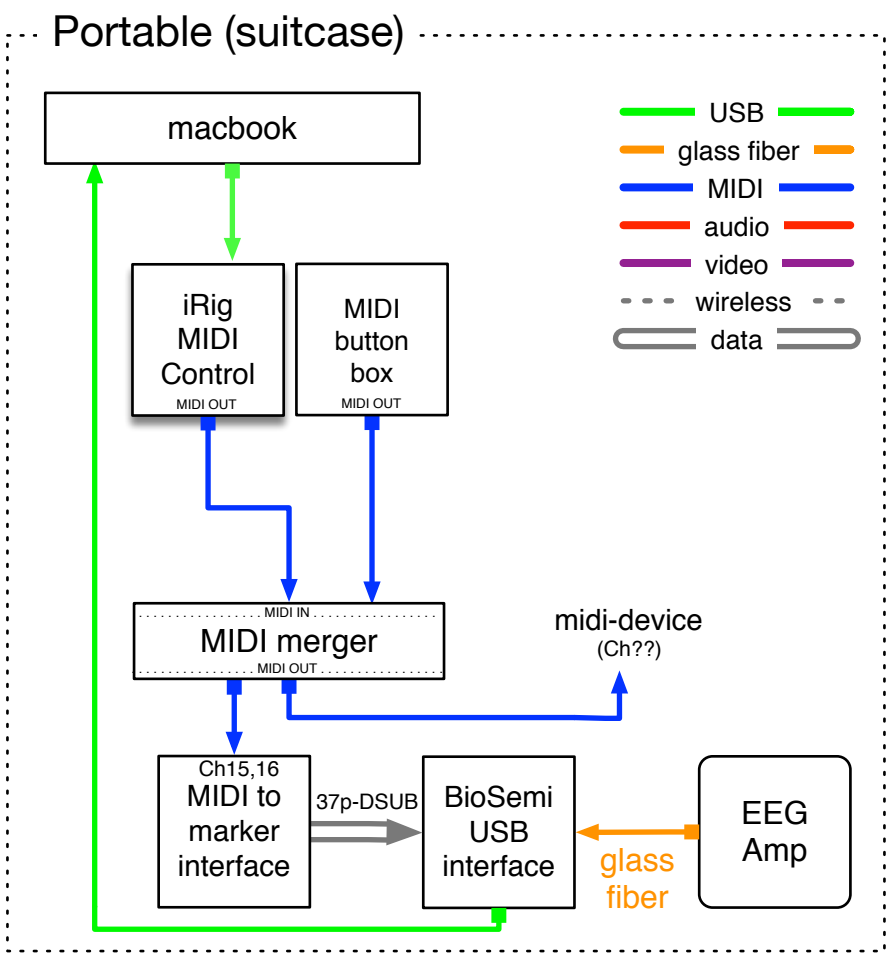
Portable (suitcase)
macbook
USB
glass fiber
MIDI
audio
video
wireless
data
iRig MIDI Control
MIDI OUT
MIDI button box
MIDI OUT
MIDI IN
MIDI merger
MIDI OUT
midi-device
(Ch??)
Ch15,16
MIDI to marker interface
37p-DSUB
BioSemi USB interface
glass fiber
EEG Amp